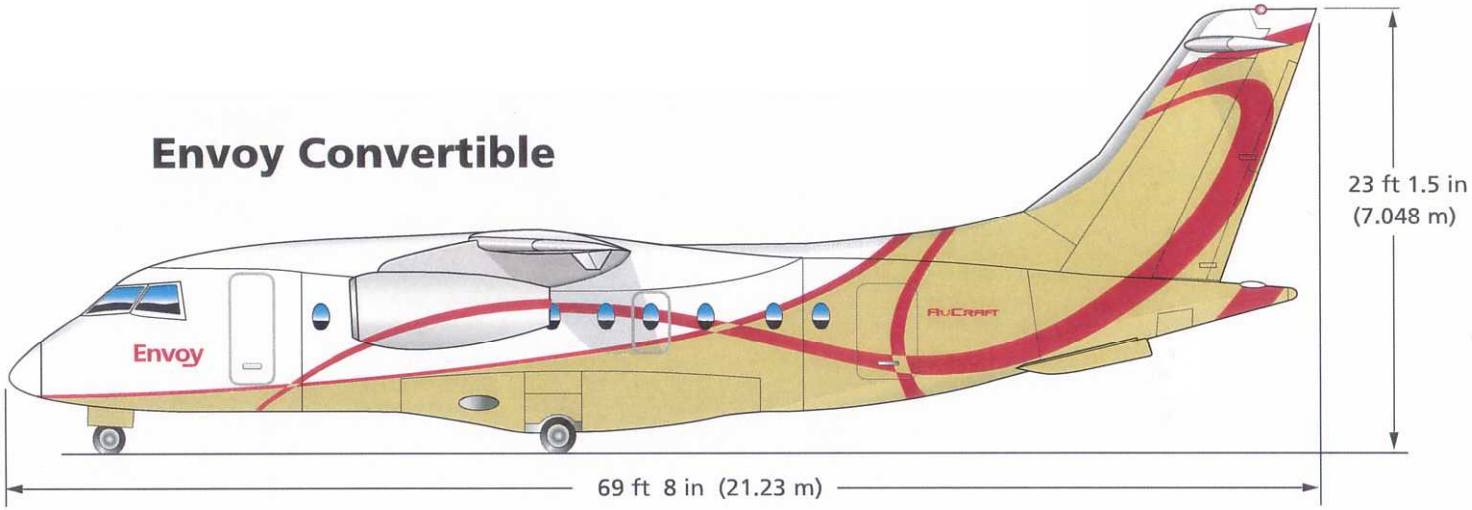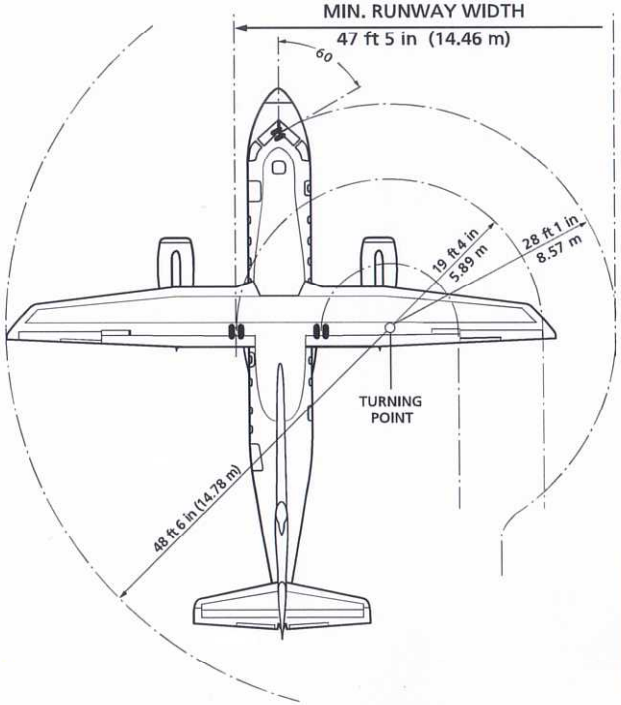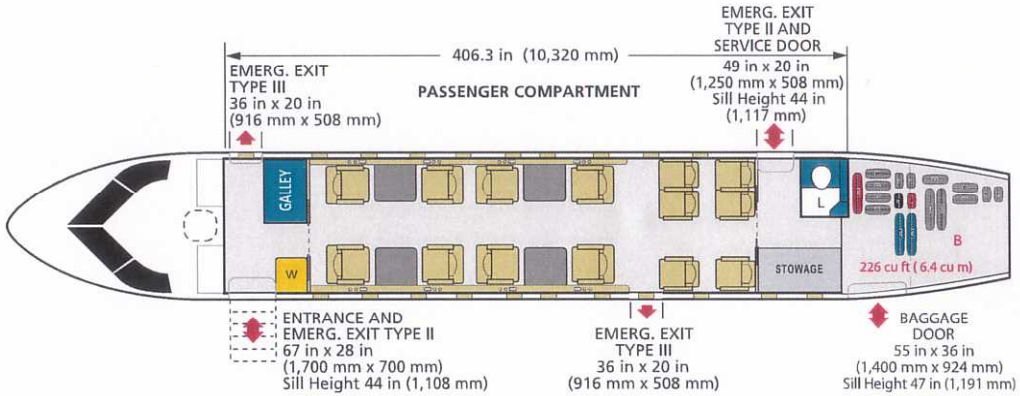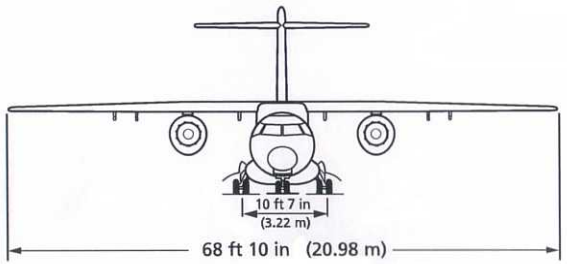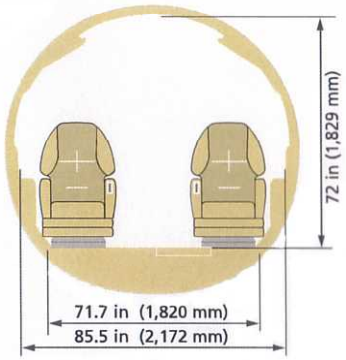Envoy Convertible